INDEX COPERNICUS INTERNATIONAL



Bio-Algorithms and Med-Systems

WWW.BAMSJOURNAL.COM ISSN: 1896-530X

SHORT COMMUNICATION

Received: 11.08.2024
Accepted: 13.11.2024
Published: 18.12.2024

CITE THIS ARTICLE AS:
Kubat K, Kaplon L, Moskal P, Stepien E, "Calibration of PALS System with CRM Materials for Biomedical Studies," Bio-Algorithms and Med-Systems vol. 20, special issue, pp. 35-39, 2024, DOI: 10.5604/01.3001.0054.9091

AUTHORS' CONTRIBUTION:
A. Conceptualization
B. Data Curation
C. Formal Analysis
D. Funding Acquisition
E. Investigation
F. Methodology
G. Project Administration
H. Resources
I. Software
J. Supervision
K. Validation
L. Visualization
M. Writing – Original Draft
N. Writing – Review & Editing

CORRESPONDING AUTHOR:
Karol Kubat, Marian Smoluchowski Institute of Physics, Faculty of Physics, Astronomy and Applied Computer Science, Jagiellonian University in Krakow; Łojasiewicza Str. 11, 30-348 Kraków, Poland; E-mail: karol.kubat@uj.edu.pl

COPYRIGHT:
Some rights reserved: Jagiellonian University Medical College. Published by Index Copernicus Sp. z o. o.

OPEN ACCESS:
The content of the journal „Bio-Algorithms and Med-Systems" is circulated on the basis of the Open Access which means free and limitless access to scientific data.

CREATIVE COMMONS CC BY:
Attribution. It is free to copy, distribute, present and perform the copyrighted work and derivative works developed from it, provided that the name of the original author is cited.

Calibration of PALS System with CRM Materials for Biomedical Studies

Karol Kubat[1,2ABCEFKLMN], **Łukasz Kapłon**[1,2HKN], **Paweł Moskal**[1,2ADFGJKN], **Ewa Stępień**[1,2ADFGJKN]

[1]Marian Smoluchowski Institute of Physics, Faculty of Physics, Astronomy and Applied Computer Science, Jagiellonian University, Krakow, Poland
[2]Center for Theranostics, Krakow, Poland

ABSTRACT

Objective and method: Positron annihilation lifetime spectroscopy (PALS) is a powerful technique in material science that allows the investigation of the properties and behavior of positrons in various materials. PALS can be used to investigate solid structures at the nanometer scale and enable the use of positronium properties as an additional diagnostic parameter. Here we present results from calibration of the PALS system with certificated reference materials (CRM).

Materials: Source of ^{22}Na covered with layer of Kapton film, and after that parafilm from both sides was used in all experiments. Certified materials of No_5602-a (polycarbonate) and No_5601-a (fused silica) were used to ascertain if parameters were correctly identified.

Results: In an experiment three lifetime components were correctly identified. All of those components will always be present in the data in further experiments on biological samples. Lifetime components consist of: 196 ps for annihilations in Al an aluminium cover of the chamber, 386 ps for annihilations in thesource and in the Kapton foil, 463 ps for reactions with parafilm.

Conclusions: These parameters will be further used to correctly identify positron lifetimes in biological samples. Recently, a new method for imaging of positronium properties was invented and the first in-vivo images of positronium lifetime in humans were demonstrated with the multi-photon J-PET scanner. In order to correlate the positronium properties in tissue with the medically useful parameters, and to translate positronium imaging to clinics, comprehensive research of positronium properties in biological samples is needed.

KEYWORDS

PALS, CRM materials, calibration

LIST OF ABBREVIATIONS

AI – artificial intelligence
AIST – Advanced Industrial Science and Technology
CRM – certificated reference materials
J-PET – Jagiellonian PET
MRSI – Magnetic Resonance Spectroscopy Imaging
PALS – positron annihilation lifetime spectroscopy
PBS – phosphate-buffered saline
PET – Positron Emission Tomography

INTRODUCTION

Positron annihilation lifetime spectroscopy (PALS) is a powerful technique in material science that allows the investigation of the properties and behavior of positrons in various materials [1, 2]. This technique detects, measures, and interprets the lifetimes of the positronium atoms, which provides valuable information on the electronic structure and dynamics of materials. By analyzing the positronium lifetimes, researchers can gain insight into defects, vacancies and other imperfections in materials, as well as investigate positron diffusion and capture processes. Positronium is a metastable hydrogen-like bound state of an electron and a positron which can exist in two spin states [1]. Para-positronium, p-Ps, is a singlet state (with spin equal to zero), with a characteristic self-annihilation lifetime of 125 ps in a vacuum. Ortho-positronium, o-Ps, is a triplet state (with spin equal to one) with a characteristic self-annihilation lifetime of 142 ns in vacuum [1]. In molecular materials, the lifetime of o-Ps is environment dependent, and it provides information regarding the size of the void in which it resides. Ps can pick up a molecular electron, leading to a reduction of the o-Ps lifetime from 142 ns to 1–4 ns (depending on the size of the free volume in which it resides) [1]. In addition to using PALS in the investigation of solid structures, it can also be used to investigate polymers and biological samples [1–14].

Recently invented [15] and developed [16, 17] positronium imaging method, combining the PALS technique with PET imaging, enables the examination of the human cells and tissues at the nanometer scale and allows the use of the positronium properties as an additional diagnostic parameter. The first positronium images have recently been demonstrated ex-vivo [6] and in-vivo [18].

Positronium imaging as well as a PALS setup need to be correctly calibrated for positronium lifetime studies in the range relevant for biological materials. This can be obtained by characterizing it with CRM materials [19, 20].

Here we present results from the calibration of the PALS system with these materials. The study was conducted using the ^{22}Na source with activity of approximately 1.34 MBq covered by the Kapton foil and parafilm layer. Samples were placed in an aluminum chamber.

MATERIALS AND METHODS

Source was placed between plates made from certified materials No_30 (polycarbonate) and No_40 (fused silica) to ascertain if parameters were correctly identified. All measurements were made at a temperature of 22°C. Certified materials No_30 (polycarbonate) with dimensions (15 × 15 × 2.0) mm^3 and weight of 0.522(1) g and No_40 (fused silica) with dimensions (15 × 15 × 1.5) mm^3 and weight of 0.743(1) g were placed at the top and bottom of the source. CRMs were obtained from the National Institute of Advanced Industrial Science and Technology (AIST) in Tokyo, Japan.

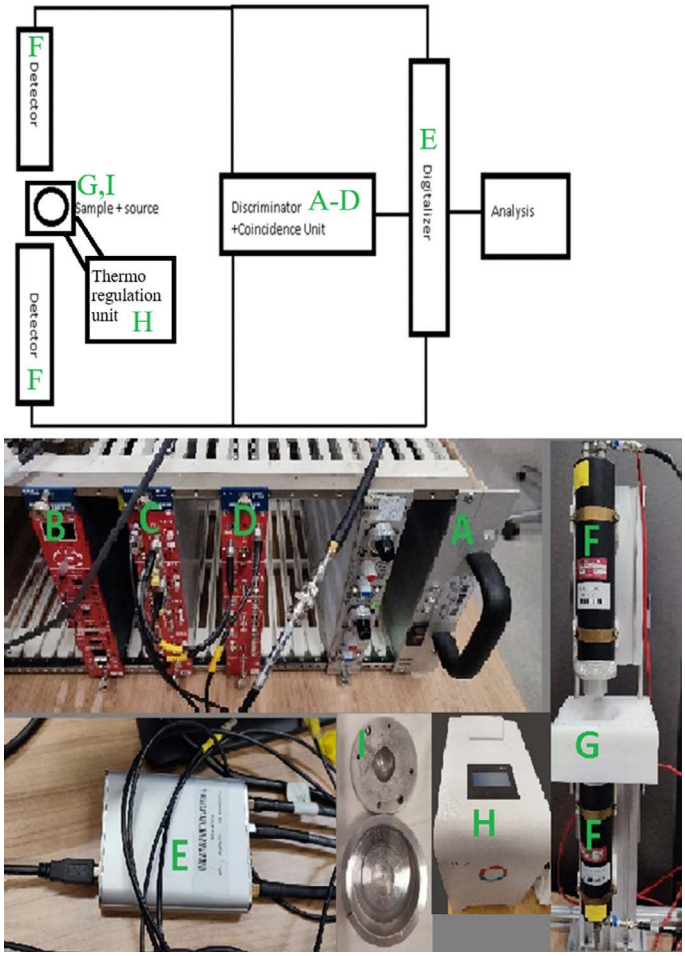

Fig. 1. Scheme of PALS setup and photos of main parts indicated with capital letters. Explanation is given in the text.

Our PALS setup consists of the following equipment, which allows measurements of the samples in a range of temperature from 10°C to 80°C (especially for biological samples stable between 30–40°C):

1. general power supply (Wiener UEN05),
2. detector power supply (CAEN N1470),
3. discriminator (CAEN N605),
4. coincidence unit (CAEN N455),
5. digitizer (PSI DRS4),

6. BaF_2 scintillation detectors (Scionix Holland 38A25/2M-E1--BAF-X-NEG),
7. Custom made thermoregulated holder,
8. Lauda Loop L100 thermoregulation system,
9. Custom made chamber for sample and source (made from ex. aluminum).

Gamma quanta produced during positron formation and positron/positronium annihilation were collected using two BaF2 scintillation detectors with energy windows set on the discriminator for lower energies of approximately 511 keV and a higher energy window on the second detector, for an energy of 1274 keV. Coincidences in the time window of 50 ns were recorded. The acquired data were binarized, and the time differences between the quanta were plotted on histograms presented in the results. Lifetimes of positronium was calculated by fitting a superposition of the convolutions of Gauss and exponential functions in Origin Lab software:

$$y = y_0 + f(x) * h(x) = y_0 + \sum_{i=1}^{4} \frac{A_i}{t_i} e^{-\left(\frac{x}{t_i}\right)^2 - \frac{x-x_c}{t_i}} \int_{-\infty}^{z_i} \frac{1}{\sqrt{2\pi}} e^{-\frac{\tau^2}{2}} d\tau \quad (1)$$

where: $f(x) = \sum_{i=1}^{4} \frac{A_i}{t_i} e^{-\frac{x}{t_i}}$, $h(x) = \frac{1}{\sqrt{2\pi}w} e^{-\frac{(x-x_c)^2}{w^2}}$ and $z_i = \frac{x-x_c}{w} - \frac{w}{t_i}$

Where: y_0 – background, A_i – area of the convolution, w – standard deviation of Gauss function, x_c – offset position of resolution function, t_i – positronium lifetime of ith component.

Components in succession were identified in the experimental first positron annihilation in chamber material, second direct annihilation in the Kapton foil and source, third positron annihilation in parafilm and fourth o-Ps in the tested sample.

RESULTS

Characterization of the positronium lifetime for any test subject must begin with a full understanding and incorporation into the analysis of the results obtained from the source or chamber in which the sample is placed. Measurements were conducted until the setup registered 10 mln counts. We first measured the source itself in a Kapton foil in an aluminum chamber and then covered the foil on each side with one layer of parafilm, as it will be used for measuring with biological/liquid samples. Below 500 ps there are the following positronium lifetimes that need to be taken into account in the fitting, such as: p-Ps lifetime in a vacuum (125 ps) [2], direct annihilation of positrons in aluminum (163–167 ps) and source (338–340 ps) or kapton (382 ps) [21–24].

Histograms of the time difference between gamma quanta from positron creation and positron/positronium annihilation are presented in Fig. 2. and 3.

Only two lifetimes with intensities above 1% were fitted, correlating with direct annihilation in the chamber material (196 ps), and annihilation from the source and in the Kapton foil with the intensity of 14% and time (386 ps). As these lifetimes were present in further experiments these parameters were fixed. However, the intensities only from events occurring in the source and the Kapton foil were fixed, as the Al chamber could be shielded first by the parafilm and then by our test object. Therefore, the intensity of first component varied and did not reach the level of 85% of the signal, as shown in Fig. 2A. After applying the previous parameters as fixed in a subsequent experiment, with the addition of a layer of parafilm onto the Kapton foil, two more components were identified, with the component with a fixed lifetime of 463 ps for parafilm being used to calibrate the setup with CRM materials, and the fourth component having low intensity.

After applying fixed lifetimes for first, second and third, and also intensity of the second component fit of superposition of convolution functions was performed for results obtained for experiments with CRM to verify if these fit parameters were set correctly for

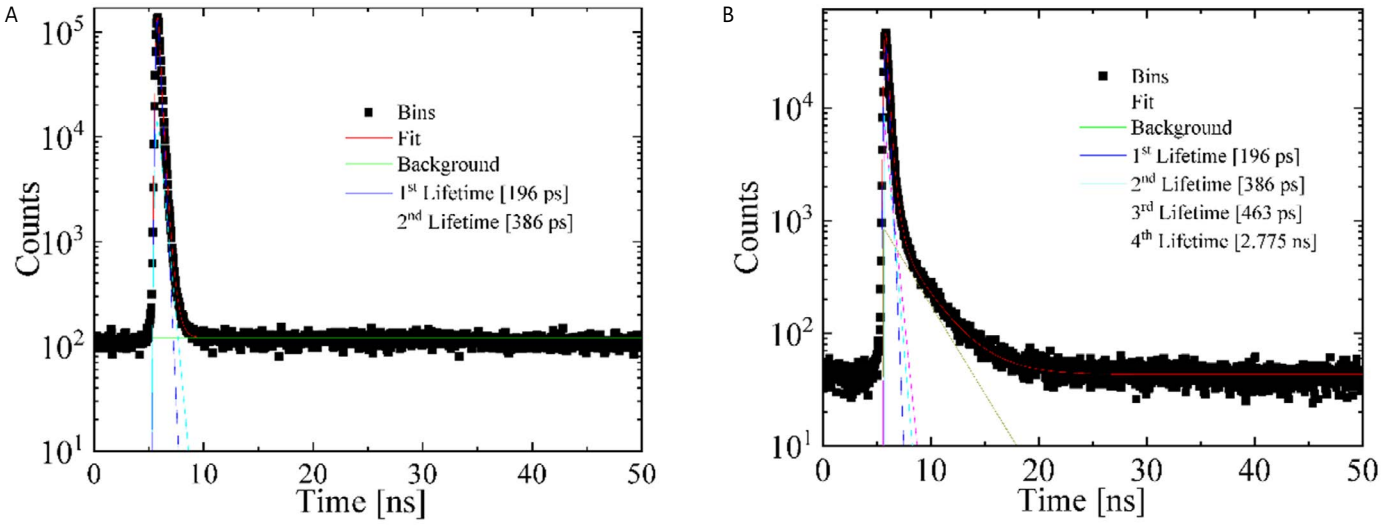

Fig. 2. Time difference graph n of (A) ^{22}Na source in the Kapton foil; (B) with parafilm on both sides of the Kapton foil in an aluminum chamber.

our setup. Therefore, only one component was completely free for the fourth component and was used to identify ortho positronium lifetime of the certified material. The o-Ps values provided by the AIST institute for No_30 are 2.10(5) ns, and for No_40 1.63(5) ns. After fitting, the obtained o-Ps times for CRM materials shown in Fig. 3. were within the error range of those from the certificate with a difference of 0.03 ns in both cases. A summary of the lifetime results for four experiments are show in Tab. I.

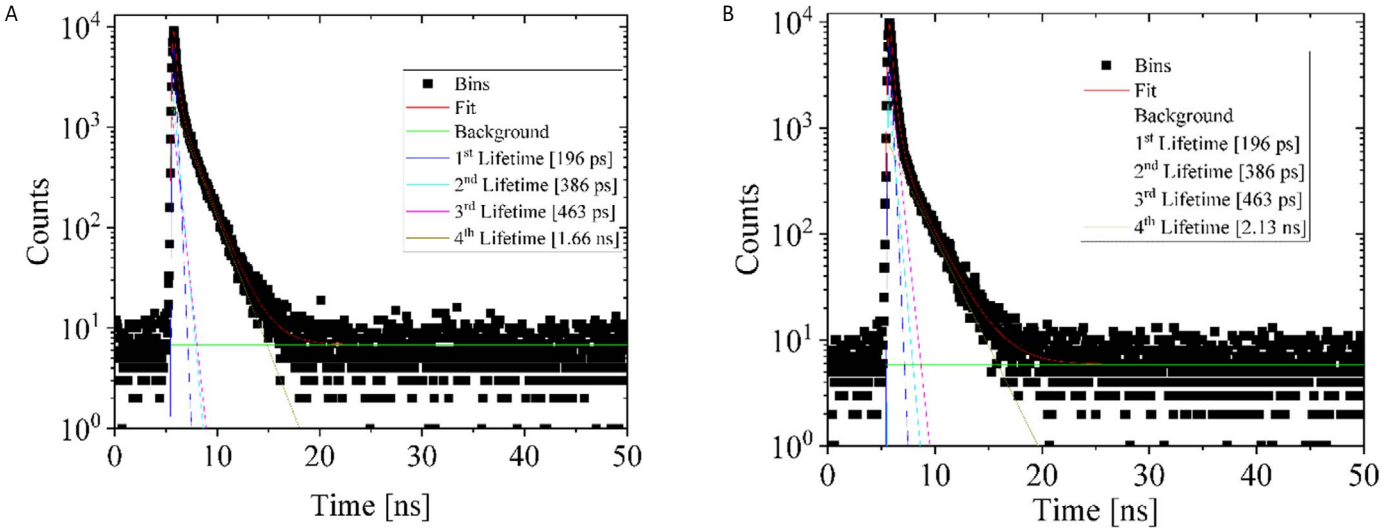

Fig. 3. Time difference graph of (A) CRM No_40 and (B) CRM No_30 in aluminum chamber with investigated fourth lifetime of o-Ps in material.

Tab. I. Summary of positronium lifetimes identified in experiments.

EXPERIMENT	1ST COMPONENT	2ND COMPONENT	3RD COMPONENT	4TH COMPONENT
Only Kapton film and Al chamber	196 (1) ps	386 (1) ps		
Parafilm layer addition	**196 ps**	386 ps	463 (15) ps	2.77 (2) ns
CRM No_40	**196 ps**	**386 ps**	**463 ps**	1.66 (5) ns
CRM No_30	**196 ps**	**386 ps**	**463 ps**	2.13 (4) ns

* Values in bold are fixed parameters in fitting.

DISCUSSION

The main aim of this study was to determine the fitting parameters of the setup for further investigation of biological samples. To avoid bias in the measurement results obtained by PALS, it was necessary to correctly identify those lifetimes that do not come from the sample, and all the more so because these parameters may change even under the influence of temperature [25] or the pressure at which the experiment is carried out. With this in mind, the value of 125 ps for p-Ps is not used, since within the resolution of the system it effectively accounts for in the components of Al and Kapton. A lifetime of 166 ps was proposed as a starting parameter for the Al chamber, but as a result of fitting and due to the purity of aluminum, 196 ps was assumed to be correct. As for the intensity of 1st component lifetime was not fixed, as it can change with the type of sample placed in the chamber. The intensity value registered for Kapton was correct, and it was determined to be 14%, with a positron lifetime of 386 ps in correlation with the ^{22}Na source used as the intensity of positron lifetime Kapton film can increase with an increasing Z value of the source [22]. For parafilm foil the positron lifetime was fixed at 463 ps, but intensity was not fixed, as it was changing from 15% to 25% in case of Polycarbonate and 8% for fused Silica. The results we presented emphasize the importance of calibrating the system using materials with known values in order to make correct assumptions about the results in biological samples, which often have subtle differences [14].

CONCLUSIONS

The experiment correctly identified three components of the positronium lifetime: 196 ps for the Al chamber, 386 ps for Kapon foil and 463 ps for one layer of parafilm foil. Additionally, the intensity of the second component, correlating with the source and the Kapton foil, the direct annihilation of positronium was determined to be 14%. Confirmation of the lifetime parameters from the experimental setup (chamber, source, cover layers) was performed using CRM materials, showing that we can use them to correctly identify o-Ps lifetimes in biological samples. Newly established parameters for biological samples could be used similarly to MRS to contrast or create

new images for PET using the J-PET system. Further tests with water or phosphate-buffered saline (PBS) solution are necessary to fully limit the range of parameters, especially those observed for the chamber.

ACKNOWLEDGEMENTS AND FUNDING

We acknowledge support by the National Science Centre of Poland through grant nos. 2021/42/A/ST2/00423, 2021/43/B/ST2/02150, 2022/47/I/NZ7/03112, and by the the SciMat and qLife Priority Research Areas budget under the program Excellence Initiative – Research University at the Jagiellonian University.

CONFLICT OF INTEREST

Authors have declared no potential conflicts of interest.

REFERENCES

1. Bass SD, Mariazzi S, Moskal P, Stępień E. Colloquium: Positronium physics and biomedical applications. Rev Mod Phys. 2023;95(2):021002. doi: https://doi.org/10.1103/RevModPhys.95.021002.
2. Gidley DW, Peng HG, Vallery RS. Positron annihilation as a method to characterize porous materials. Annu. Rev. Mater. Res. 2006; 36(36):49–79. doi: https://doi.org/10.1146/annurev.matsci.36.111904.135144.
3. Moskal P, Kubicz E, Grudzień G, Czerwiński E, Dulski K, Leszczyński B, et al. Developing a novel positronium biomarker for cardiac myxoma imaging. EJNMMI Phys. 2023;10(1):1–16. doi: https://doi.org/10.1186/S40658-023-00543-W/FIGURES/5.
4. Jasińska B, Zgardzińska B, Chołubek G, Pietrow M, Gorgol M, Wiktor K, et al. Human tissues investigation using PALS technique. Acta Physica Polonica B. 2017;48(10):1737–47. doi: https://doi.org/10.5506/APhysPolB.48.1737.
5. Moyo S, Moskal P, Stępień EŁ. Feasibility study of positronium application for blood clots structural characteristics. Bio-Algorithms and Med-Systems. 2022;18(1):163–7. doi: https://doi.org/10.2478/bioal-2022-0087.
6. Moskal P, Dulski K, Chug N, Curceanu C, Czerwiński E, Dadgar M, et al. Positronium imaging with the novel multiphoton PET scanner. Sci Adv. 2021;7(42):4394–407. doi: https://doi.org/10.1126/sciadv.abh4394.
7. Consolati G, Nichetti D, Quasso F. Probing the free volume in polymers by means of positron annihilation lifetime spectroscopy. Polymers (Basel). 2023;15(14):3128. doi: https://doi.org/10.3390/polym15143128.
8. Chen Y, Yang S, Zhang T, Xu M, Zhao J, Zeng M, et al. Positron annihilation study of chitosan and its derived carbon/pillared montmorillonite clay stabilized Pd species nanocomposites. Polym Test. 2022;114:107689. doi: https://doi.org/10.1016/J.POLYMERTESTING.2022.107689.
9. Klym H, Kostiv Y. Exploring nanovoids in spinel ceramics using positron–positronium trapping model. Mol. Cryst. Liq. Cryst. 2024; 768(16):1–9. doi: https://doi.org/10.1080/15421406.2024.2366062.
10. Avachat AV, Mahmoud KH, Leja AG, Xu JJ, Anastasio MA, Sivaguru M, et al. Ortho-positronium lifetime for soft-tissue classification. Sci Rep. 2024;14:21155. doi: https://doi.org/10.1038/s41598-024-71695-7.
11. Zaleski R, Kotowicz O, Górska A, Zaleski K, Zgardzińska B. Investigation of the ability to detect electrolyte disorder using PET with positron annihilation lifetime spectroscopy. J. Phys. Chem. B. 2023;127(46):9887–890. doi: https://doi.org/10.1021/acs.jpcb.3c04208.
12. Karimi H, Moskal P, Żak A, Stępień EŁ. 3D melanoma spheroid model for the development of positronium biomarkers. Sci Rep. 2023;13:7648. https://doi.org/10.1038/s41598-023-34571-4.
13. Takyu S, Ken-ichiro M, Tetsuya H, Fumihiko N, Go A, Hideaki T, et al. Quantification of radicals in aqueous solution by positronium lifetime: an experiment using a clinical PET scanner. Jpn. J. Appl. Phys. 2024;63(8):086003. doi: https://doi.org/10.35848/1347-4065/AD679A.
14. Takyu S, Nishikido F, Tashima H, Akamatsu G, Matsumoto K-I, Takahashi M, et al. Positronium lifetime measurement using a clinical PET system for tumor hypoxia identification. NIM-A. 2024;1065:169514. doi: https://doi.org/10.1016/J.NIMA.2024.169514.
15. Moskal P. Positronium imaging. In: 2019 IEEE Nuclear Science Symposium and Medical Imaging Conference (NSS/MIC); 2019 Oct 26–Nov 2, Manchester, UK, 2019. pp. 1-3. doi: https://doi.org/10.1109/NSS/MIC42101.2019.9059856.
16. Moskal P, Kisielewska D, Curceanu C, Czerwiński E, Dulski K, Gajos A, et al. Feasibility study of the positronium imaging with the J-PET tomograph. Phys. Med. Biol. 2019;64(5):055017. doi: https://doi.org/10.1088/1361-6560/AAFE20.
17. Moskal P, Kisielewska D, Shopa RY, Bura Z, Chhokar J, Curceanu C, et al. Performance assessment of the 2 γ positronium imaging with the total-body PET scanners. EJNMMI Physics. 2020;7(1):1–16. doi: https://doi.org/10.1186/S40658-020-00307-W/FIGURES/7.
18. Moskal P, Baran J, Bass S, Choiński J, Chug N, Curceanu C, et al. Positronium image of the human brain in vivo. Sci Adv. 2024;10(37):2840. doi: https://doi.org/10.1126/SCIADV.ADP2840.
19. unit.aist.go.jp [Internet]. National Metrology Institute of Japan Certificated Reference Material Catalog 2024–2025 [cited 2024 Dec 12]. Available from: https://unit.aist.go.jp/nmij/english/refmate/pdf/CRM_Catalog_(JE).pdf.
20. Steinberger WM, Mercolli L, Breuer J, Sari H, Parzych S, Niedzwiecki S, et al. Positronium lifetime validation measurements using a long-axial field-of-view positron emission tomography scanner. EJNMMI Physics. 2024;11(1):1–20. doi: https://doi.org/10.1186/S40658-024-00678-4/TABLES/2.
21. Djourelov N, Misheva M. Source correction in positron annihilation lifetime spectroscopy, J. Phys.: Condens. Matter. 1996;8:2081–87. doi: https://doi.org/10.1088/0953-8984/8/12/020.
22. Monge MA, Del Rio J. Position annihilation in Kapton source-supporting foils Positron annihilation in Kapton source-supporting foils. Phys.: Condens. Matter. 1994;6:2643–46. doi: https://doi.org/10.1088/0953-8984/6/13/021.
23. Seeger A, Banhart F. On the systematics of positron lifetimes in metals. Phys. Status Solidi A, 1987;102(1):171–9. doi: https://doi.org/10.1002/PSSA.2211020117.
24. Weisberg H, Berko S. Positron lifetimes in metals. Phys Rev. 1967;154(2):249. doi: https://doi.org/10.1103/PhysRev.154.249.
25. Goworek T, Ciesielski K, Jasińska B, Wawryszczuk J. Positronium states in the pores of silica gel. Chem Phys. 1998;230(2–3):305–15. doi: https://doi.org/10.1016/S0301-0104(98)00068-8.